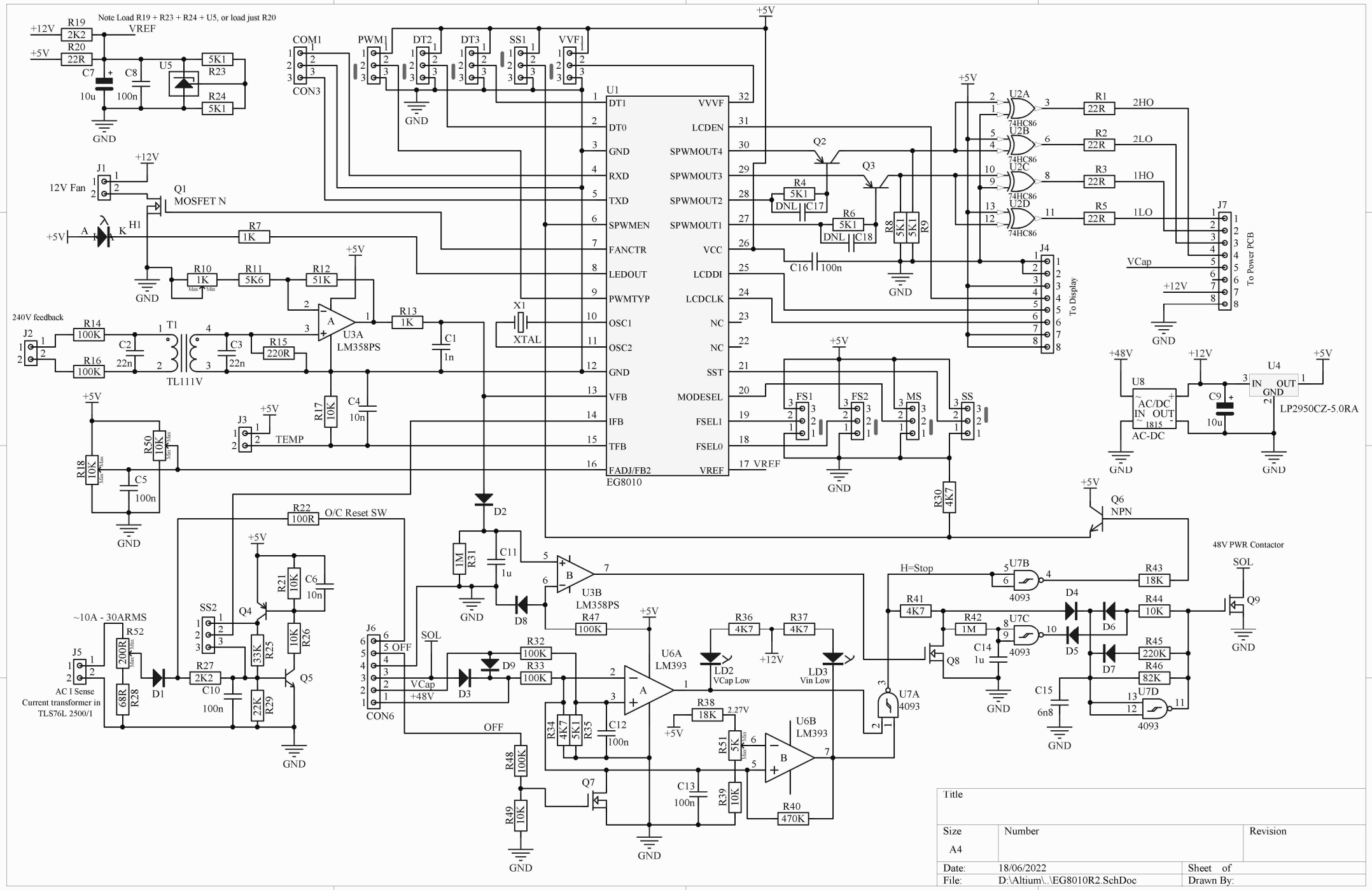

Title		
Size A4	Number	Revision
Date: 18/06/2022		Sheet of
File: D:\Altium\..\EG8010R2.SchDoc		Drawn By: